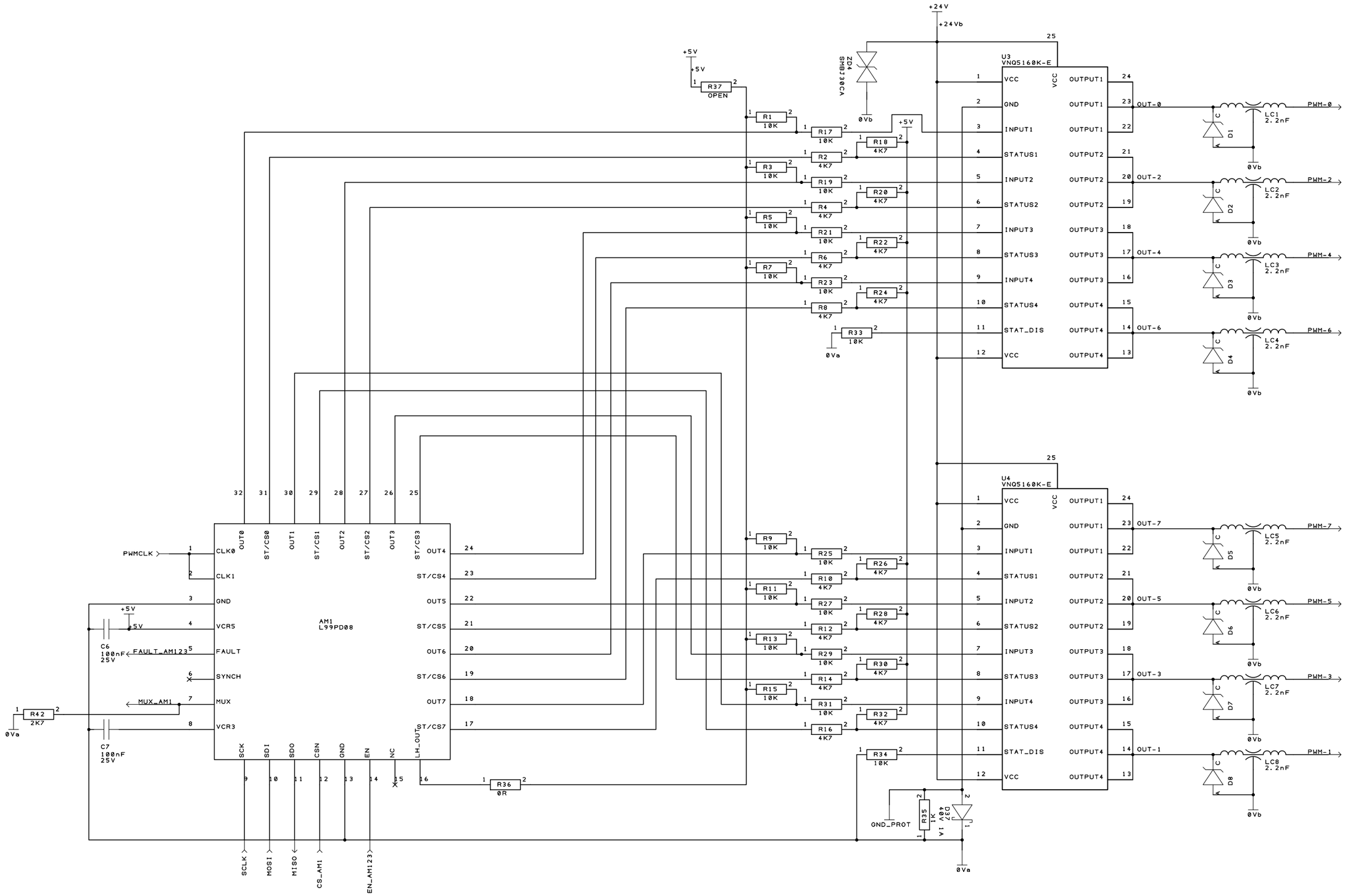

REV	DATE	BY	CHK	APP	CUS	DESCRIPTION
2-0	2013-01-24	TKA	KST	TBH		RELEASED FOR SERIAL PRODUCTION
1-0	2012-01-10	TKA				PROTOTYPE

KYSTDESIGN
SUB-SEA TECHNOLOGY

CONTACT
Tel +47 52 70 62 50
Fax +47 52 70 62 01
www.kystdesign.no

Strandgaten 202
5525 Haugesund
NORWAY

DOCUMENT TITLE: HYDRAULICS DRIVERCARD
PWM OUTPUT 0-7

DRAWING NUMBER	SHEET NUMBER	SIZE	REVISION
AE99-1000E01	5 OF 10	A3	2-0